NEW STOCK ITEMS AVAILABLE

AVAILABLE IN SEATTLE/PORTLAND

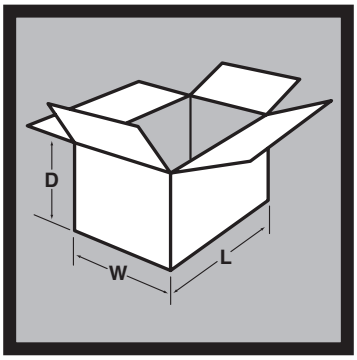

CORRUGATED

REGULAR SLOTTED CONTAINERS WITH EXTRA DEPTH SCORES

Furnished flat in unitized bundles.

*All dimensions listed are inside dimensions. The first dimension is **L**ength, followed by **W**idth and then **D**epth.*

Stock No.	Inside Dimensions L × W × D		Wt. Per Each	No. Per Bundle	No. Per Pallet
R2252	6 × 6 × 6	extra score at 4"	.228	25	2100
R2260	8 × 8 × 8	extra scores at 6", 4"	.397	25	1050
R2261	10 × 10 × 10	extra scores at 8", 6"	.613	25	700
R2253	12 × 10 × 8	extra scores at 6", 4"	.673	25	1050
R2268	12 × 12 × 12	extra scores at 10", 8", 6"	.876	25	500
R1070	14 × 10 × 5		.578	25	1050
R2262	14 × 14 × 14	extra scores at 12", 10"	1.849	25	500
R2263	16 × 16 × 16	extra scores at 14", 12", 10"	1.583	10	240
R2300	14 × 12 × 10	extra scores at 8", 6", 4"	1.002	25	200
R2265	18 × 18 × 18	extra scores at 16", 14", 12", 8", 6"	1.996	10	130
R908	18 × 12 × 10	extra scores at 8"	1.034	25	500
R2266	20 × 20 × 20	extra scores at 18", 16", 14"	2.461	10	130
R2258	22 × 22 × 22	extra scores at 20", 18", 16"	3.047	10	130
R1101	26 × 20 × 20		2.875	5	135
R1100	36 × 24 × 20		4.107	5	135

SNOWBOARD BOXES

Furnished flat in unitized bundles.

*All dimensions listed are inside dimensions. The first dimension is **L**ength, followed by **W**idth and then **D**epth.*

Stock No.	Inside Dimensions L × W × D		Wt. Per Each	No. Per Bundle	No. Per Pallet
R1145	$12\frac{1}{2} \times 7\frac{1}{2} \times 57\frac{1}{2}$	32 ECT B Brown FOL Snowboard 145 cm	2.315	15	270
R1165	$12\frac{1}{2} \times 7\frac{1}{2} \times 65$	32 ECT C Brown FOL Snowboard 165 cm	2.555	15	270
R1185	$12\frac{1}{2} \times 7\frac{1}{2} \times 73$	32 ECT C Brown FOL Snowboard 185 cm	2.812	15	270

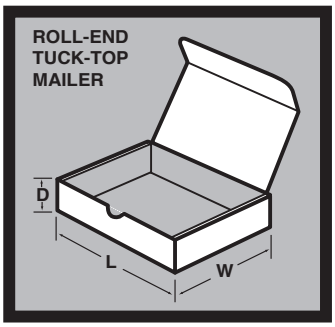

RETT

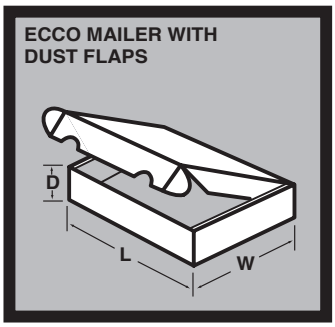

ECCO/DF

E-FLUTE CORRUGATED MAILERS (DIE-CUT)

#3 WHITE OUTSIDE

Sold by the case only
Furnished flat — Rigid self-locking design sets up in seconds —
Perfect for Shipping and Mailing • Shelf Display • Storage • Retail and Gift Box

Stock No.	Inside Dimensions L × W × D	Style	Wt. Per Each	No. Per Bundle	No. Per Pallet
M540	5 × 3 × 2	RETT	.079	50	4200
M573	9 × 5 1/2 × 1 1/4	ECCO/DF	.159	50	3150
M590	4 1/2 × 3 3/8 × 1 1/16	RETT	.058	50	7000

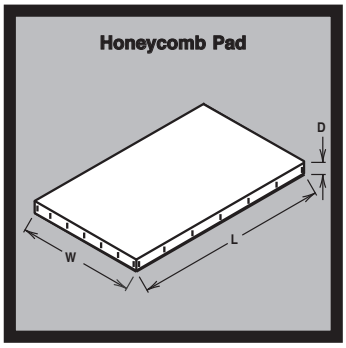

HONEYCOMB PADS

CORE TYPE 4 - STANDARD FACINGS

Pads are great for void fill, blocking and bracing.
Custom pad sizes available upon request.

Part Number	Size L × W × D	Wt. Per Each	No. Per Pallet
HC1	48 × 96 × 1/2	6	92
HC2	48 × 96 × 1	9	48
HC4	48 × 96 × 1 1/2	11	32
HC3	48 × 96 × 2	14	24

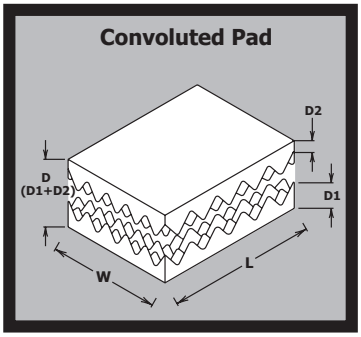

CONVOLUTED PAD SETS

1.0# URETHANE FOAM - CHARCOAL COLORED

Set Consists of Top & Bottom Nested Pads
D=2" D1=1 1/2" D2=1/2"
Resilient Cushion Foam for Product Protection

Part Number	Size L × W × D	Wt. Per Each	No. Per Case
CNV1	8 × 6 × 2	4.5	48
CNV2	12 × 12 × 2	6.9	24
CNV3	16 × 16 × 2	5.9	12

STOCK CARTONS AVAILABLE

FOR IMMEDIATE DELIVERY

FOR SPECIAL SIZES OR INTERIOR PACKAGING, CONTACT OUR SALESPERSON

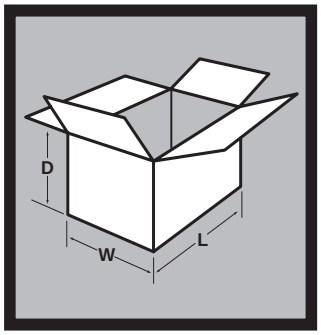

CORRUGATED

REGULAR SLOTTED CONTAINERS

Furnished flat in unitized bundles.

All Regular Slotted Containers (RSC's) are manufactured in 200# Test, 32 ECT, or Greater.

- ***TW*** *boxes are #3 white outside and brown inside.*
- ***R*** *boxes are brown both inside and outside.*

*All dimensions listed are inside dimensions. The first dimension is **L**ength, followed by **W**idth and then **D**epth.*

TI

Stock No.	Inside Dimensions L × W × D	No. Per Bundle	No. Per Pallet	Stock No.	Inside Dimensions L × W × D	No. Per Bundle	No. Per Pallet
R2	4 × 4 × 4	25	4375	TW66	6 × 6 × 2	25	3500
TW2	4 × 4 × 4	25	4375	R146	6 × 6 × 3	25	2800
R116	4 × 4 × 5	25	4200	TW146	6 × 6 × 3	25	2800
TW116	4 × 4 × 5	25	4200	R5	6 × 6 × 4	25	2800
R261	4 × 4 × 8	25	3500	TW5	6 × 6 × 4	25	2800
TW261	4 × 4 × 8	25	3500	R147	6 × 6 × 5	25	2800
TW117	4 × 4 × 9	25	2625	TW147	6 × 6 × 5	25	2800
R127	4 × 4 × 12	25	2625	R6	6 × 6 × 6	25	2100
TW127	4 × 4 × 12	25	2625	TW6	6 × 6 × 6	25	2100
R145	4 × 4 × 18	25	1750	R715	6 × 6 × 36	25	700
TW145	4 × 4 × 18	25	1750	R331	6 × 6 × 40	25	700
TW321	4 × 4 × 20	25	1750	TW331	6 × 6 × 40	25	700
R322	4 × 4 × 24	25	1400	R332	6 × 6 × 48	25	500
TW322	4 × 4 × 24	25	1400	TW332	6 × 6 × 48	25	500
R323	4 × 4 × 28	25	1400	TW293	$6^5/_8 \times 4^1/_4 \times 10^1/_4$	25	2100
TW323	4 × 4 × 28	25	1400	R266	$6^3/_4 \times 6^3/_4 \times 7^3/_4$	25	1575
TW324	4 × 4 × 32	25	1050	TW266	$6^3/_4 \times 6^3/_4 \times 7^3/_4$	25	1575
R288	4 × 4 × 36	25	1050	R54	$6^3/_4 \times 6^3/_4 \times 12^1/_8$	25	1050
TW288	4 × 4 × 36	25	1050	TW54	$6^3/_4 \times 6^3/_4 \times 12^1/_8$	25	1050
R325	4 × 4 × 40	25	1050	R99	7 × 5 × 3	25	3500
TW325	4 × 4 × 40	25	1050	TW99	7 × 5 × 3	25	3500
R326	4 × 4 × 48	25	700	R100	7 × 5 × 5	25	2800
TW326	4 × 4 × 48	25	700	TW100	7 × 5 × 5	25	2800
R3	$4^1/_2 \times 4^1/_2 \times 4^1/_2$	25	3500	R123	7 × 6 × 4	25	2625
TW3	$4^1/_2 \times 4^1/_2 \times 4^1/_2$	25	3500	TW123	7 × 6 × 4	25	2625
R1015	5 × 5 × 3	25	3500	R124	7 × 6 × 6	25	2100
R59	$5 \times 5 \times 3^1/_2$	25	3500	TW124	7 × 6 × 6	25	2100
TW59	$5 \times 5 \times 3^1/_2$	25	3500	R716	7 × 7 × 3	25	2100
R327	5 × 5 × 4	25	3500	R125	7 × 7 × 4	25	2100
TW327	5 × 5 × 4	25	3500	TW125	7 × 7 × 4	25	2100
R74	5 × 5 × 5	25	3500	R101	7 × 7 × 5	25	2100
TW74	5 × 5 × 5	25	3500	TW101	7 × 7 × 5	25	2100
R120	5 × 5 × 10	25	2100	R333	7 × 7 × 6	25	1575
TW120	5 × 5 × 10	25	2100	TW333	7 × 7 × 6	25	1575
TW701	$5^1/_2 \times 5^1/_2 \times 5^1/_2$	25	2800	R7	7 × 7 × 7	25	1575
R1018	6 × 3 × 3	25	4200	TW7	7 × 7 × 7	25	1575
R137	$6 \times 4 \times 3^1/_2$	25	4200	R717	7 × 7 × 8	25	1575
TW137	$6 \times 4 \times 3^1/_2$	25	4200	R718	7 × 7 × 10	25	1050
R328	6 × 4 × 4	25	3500	R43	7 × 7 × 12	25	1050
TW328	6 × 4 × 4	25	3500	TW43	7 × 7 × 12	25	1050
R4	$6 \times 4 \times 4^1/_2$	25	3500	R719	$7^1/_4 \times 5^3/_4 \times 1^{15}/_{16}$	25	2625
TW4	$6 \times 4 \times 4^1/_2$	25	3500	R68	8 × 4 × 4	25	3500
R714	6 × 5 × 4	25	2800	TW68	8 × 4 × 4	25	3500
R60	$6 \times 5 \times 4^1/_2$	25	3500	R150	8 × 5 × 4	25	2625
TW60	$6 \times 5 \times 4^1/_2$	25	3500	TW150	8 × 5 × 4	25	2625
R329	6 × 5 × 5	25	2800	R126	8 × 5 × 5	25	2800
TW329	6 × 5 × 5	25	2800	TW126	8 × 5 × 5	25	2800
R66	6 × 6 × 2	25	3500	R334	8 × 6 × 3	25	2100

Stock No.	Inside Dimensions L × W × D	No. Per Bundle	No. Per Pallet	Stock No.	Inside Dimensions L × W × D		No. Per Bundle	No. Per Pallet
TW334	8 × 6 × 3	25	2100	R69	10 × 4 × 4		25	3150
R8	8 × 6 × 4	25	2100	TW69	10 × 4 × 4		25	3150
TW8	8 × 6 × 4	25	2100	R703	10 × 5 × 4		25	2625
R335	8 × 6 × 5	25	2100	TW703	10 × 5 × 4		25	2625
TW335	8 × 6 × 5	25	2100	R311	10 × 5 × 5		25	2625
R61	8 × 6 × 6	25	2100	TW311	10 × 5 × 5		25	2625
TW61	8 × 6 × 6	25	2100	*TW654	10 × 5 × 83	**(FOL)** (Ski)	15	270
R153	8 × 8 × 3	25	2100	R725	10 × 6 × 3		25	2100
TW153	8 × 8 × 3	25	2100	R13	10 × 6 × 4		25	2100
R9	8 × 8 × 4	25	1575	TW13	10 × 6 × 4		25	2100
TW9	8 × 8 × 4	25	1575	R167	10 × 6 × 5		25	2100
R154	8 × 8 × 5	25	1575	TW167	10 × 6 × 5		25	2100
TW154	8 × 8 × 5	25	1575	R14	10 × 6 × 6		25	1575
R10	8 × 8 × 6	25	1575	TW14	10 × 6 × 6		25	1575
TW10	8 × 8 × 6	25	1575	R62	10 × 6 3/4 × 3 1/4		25	2100
R1041	8 × 8 × 7	25	1575	TW62	10 × 6 3/4 × 3 1/4		25	2100
R11	8 × 8 × 8	25	1050	R168	10 × 7 × 4		25	2100
TW11	8 × 8 × 8	25	1050	TW168	10 × 7 × 4		25	2100
R722	8 × 8 × 13 1/4	25	700	R169	10 × 7 × 5		25	1575
R337	8 × 8 × 17	25	1050	TW169	10 × 7 × 5		25	1575
TW337	8 × 8 × 17	25	1050	R259	10 × 7 × 7		25	1575
TW338	8 1/2 × 6 5/8 × 10 1/4	25	1050	TW259	10 × 7 × 7		25	1575
R849	8 1/2 × 8 1/2 × 8	25	1050	R129	10 × 8 × 4		25	1400
R119	8 1/2 × 8 1/2 × 8 1/2	25	1050	TW129	10 × 8 × 4		25	1400
TW119	8 1/2 × 8 1/2 × 8 1/2	25	1050	R170	10 × 8 × 5		25	1575
R629	8 1/2 × 8 1/2 × 24	25	500	TW170	10 × 8 × 5		25	1575
TW340	8 3/4 × 8 × 10 1/4	25	1050	R15	10 × 8 × 6		25	1050
TW77	8 3/4 × 8 3/4 × 9 1/2 (TW2, 8 Pack Master)	25	1050	TW15	10 × 8 × 6		25	1050
R341	9 × 4 × 3	25	3150	R171	10 × 8 × 7		25	1575
TW341	9 × 4 × 3	25	3150	TW171	10 × 8 × 7		25	1575
R128	9 × 4 × 4	25	3150	R16	10 × 8 × 8		25	1050
TW128	9 × 4 × 4	25	3150	TW16	10 × 8 × 8		25	1050
R342	9 × 5 × 3	25	2625	R704	10 × 9 × 6		25	1050
TW342	9 × 5 × 3	25	2625	TW704	10 × 9 × 6		25	1050
R306	9 × 5 × 5	25	2625	TW705	10 × 9 × 8		25	1050
TW306	9 × 5 × 5	25	2625	R348	10 × 9 × 9		25	700
TW158	9 × 6 × 2	25	2625	TW348	10 × 9 × 9		25	700
R102	9 × 6 × 4	25	2100	R349	10 × 10 × 3		25	1050
TW102	9 × 6 × 4	25	2100	TW349	10 × 10 × 3		25	1050
R343	9 × 6 × 5	25	2100	R51	10 × 10 × 4		25	1050
TW343	9 × 6 × 5	25	2100	TW51	10 × 10 × 4		25	1050
R82	9 × 6 × 5 1/2	25	2100	R73	10 × 10 × 5		25	1050
TW82	9 × 6 × 5 1/2	25	2100	TW73	10 × 10 × 5		25	1050
R103	9 × 6 × 6	25	2100	R55	10 × 10 × 6		25	1050
TW103	9 × 6 × 6	25	2100	TW55	10 × 10 × 6		25	1050
R159	9 × 7 × 4	25	2100	R350	10 × 10 × 7		25	1050
TW159	9 × 7 × 4	25	2100	TW350	10 × 10 × 7		25	1050
R336	9 × 7 × 5	25	1400	R83	10 × 10 × 8		25	1050
TW336	9 × 7 × 5	25	1400	TW83	10 × 10 × 8		25	1050
R344	9 × 7 × 7	25	1575	R351	10 × 10 × 9		25	700
TW344	9 × 7 × 7	25	1575	TW351	10 × 10 × 9		25	700
R345	9 × 8 × 4	25	1400	R17	10 × 10 × 10		25	700
TW345	9 × 8 × 4	25	1400	TW17	10 × 10 × 10		25	700
R162	9 × 8 × 6	25	1575	R726	10 × 10 × 10	**(Heavy Duty)**	25	500
TW162	9 × 8 × 6	25	1575	R1008	10 × 10 × 10	**(Doublewall)**	15	300
R702	9 × 8 × 8	25	1050	R645	10 × 10 × 12		25	500
TW702	9 × 8 × 8	25	1050	R352	10 × 10 × 15		25	500
R163	9 × 9 × 4	25	1575	TW352	10 × 10 × 15		25	500
TW163	9 × 9 × 4	25	1575	R353	10 1/2 × 7 3/4 × 6 7/16		25	1400
R594	9 × 9 × 5	25	1575	TW353	10 1/2 × 7 3/4 × 6 7/16		25	1400
TW594	9 × 9 × 5	25	1575	R727	10 1/2 × 10 1/2 × 5 1/2		25	1050
R104	9 × 9 × 6	25	1575	R179	10 1/2 × 10 1/2 × 7 1/2		25	700
TW104	9 × 9 × 6	25	1575	TW179	10 1/2 × 10 1/2 × 7 1/2		25	700
R346	9 × 9 × 7	25	1050	R354	10 1/2 × 10 1/2 × 10 1/2		25	500
TW346	9 × 9 × 7	25	1050	TW354	10 1/2 × 10 1/2 × 10 1/2		25	500
R12	9 × 9 × 9	25	1050	R130	11 × 6 × 4		25	2100
TW12	9 × 9 × 9	25	1050	TW130	11 × 6 × 4		25	2100
R724	9 × 9 × 25	25	375	TW355	11 × 6 × 5 1/2		25	1400
R53	9 1/2 × 9 1/2 × 14 1/4	25	500	R356	11 × 7 × 7		25	1400
TW53	9 1/2 × 9 1/2 × 14 1/4	25	500	TW356	11 × 7 × 7		25	1400

*Exceeds U.S. Postal Service 108" max.

Stock No.	Inside Dimensions L × W × D		No. Per Bundle	No. Per Pallet
R131	11 × 8 × 6		25	1050
TW131	11 × 8 × 6		25	1050
TW364	11 × 8 × 8		25	700
R729	11 × 8 3/4 × 4 7/8	(Heavy Duty)	25	750
R358	11 × 9 × 9		25	1050
TW358	11 × 9 × 9		25	1050
R593	11 × 11 × 9		25	500
TW593	11 × 11 × 9		25	500
R181	11 × 11 × 11		25	500
TW181	11 × 11 × 11		25	500
TW695	11 1/8 × 9 5/8 × 11 1/4		25	500
TW694	11 1/8 × 9 5/8 × 12		25	500
R84	11 1/4 × 8 3/4 × 4	(Letterhead)	25	1050
TW84	11 1/4 × 8 3/4 × 4	(Letterhead)	25	1050
R318	11 1/4 × 8 3/4 × 4 3/4	(Letterhead)	25	1050
TW318	11 1/4 × 8 3/4 × 4 3/4	(Letterhead)	25	1050
R52	11 1/4 × 8 3/4 × 6	(Letterhead)	25	1050
TW52	11 1/4 × 8 3/4 × 6	(Letterhead)	25	1050
R132	11 1/4 × 8 3/4 × 8	(Letterhead)	25	1050
TW132	11 1/4 × 8 3/4 × 8	(Letterhead)	25	1050
R265	11 1/4 × 8 3/4 × 10	(Letterhead)	25	1050
TW265	11 1/4 × 8 3/4 × 10	(Letterhead)	25	1050
TW357	11 1/4 × 8 3/4 × 11	(Letterhead)	25	700
R294	11 1/4 × 8 3/4 × 12	(Letterhead)	25	500
R360	11 1/4 × 8 3/4 × 12	(x-scores 6"-8"-10")	25	500
TW294	11 1/4 × 8 3/4 × 12	(Letterhead)	25	500
TW360	11 1/4 × 8 3/4 × 12	(x-scores 6"-8"-10")	25	500
R698	11 1/4 × 8 3/4 × 14 1/4	(Letterhead)	25	500
TW698	11 1/4 × 8 3/4 × 14 1/4	(Letterhead)	25	500
TW363	11 1/4 × 10 1/8 × 10 1/4		25	500
R856	11 1/2 × 9 1/2 × 6	(x-score 4")	25	1050
TW85	11 5/8 × 7 × 6 5/16		25	1050
R731	11 3/4 × 9 1/4 × 5 1/4		25	1050
R319	11 3/4 × 9 1/4 × 7 1/8		25	1050
TW319	11 3/4 × 9 1/4 × 7 1/8		25	1050
R63	12 × 4 × 4		25	2625
TW63	12 × 4 × 4		25	2625
R151	12 × 5 × 4		25	2100
TW151	12 × 5 × 4		25	2100
R56	12 × 6 × 4		25	2100
TW56	12 × 6 × 4		25	2100
R365	12 × 6 × 5		25	1750
TW365	12 × 6 × 5		25	1750
R64	12 × 6 × 6		25	1575
TW64	12 × 6 × 6		25	1575
R697	12 × 7 × 5		25	1400
TW697	12 × 7 × 5		25	1400
R836	12 × 7 × 7		25	700
R98	12 × 8 × 4		25	1400
TW98	12 × 8 × 4		25	1400
R75	12 × 8 × 6		25	1050
TW75	12 × 8 × 6		25	1050
R79	12 × 8 × 8		25	1050
TW79	12 × 8 × 8		25	1050
R366	12 × 8 3/4 × 10 1/4		25	700
TW366	12 × 8 3/4 × 10 1/4		25	700
R133	12 × 9 × 3		25	1400
TW133	12 × 9 × 3		25	1400
R307	12 × 9 × 4		25	1400
TW307	12 × 9 × 4		25	1400
TW347	12 × 9 × 5		25	1050
R143	12 × 9 × 6		25	1050
TW143	12 × 9 × 6		25	1050
R134	12 × 9 × 7		25	1050
TW134	12 × 9 × 7		25	1050
R135	12 × 9 × 9		25	1050
TW135	12 × 9 × 9		25	1050
R721	12 × 9 × 10		25	700
R183	12 × 9 1/2 × 4		25	1050
TW183	12 × 9 1/2 × 4		25	1050

Stock No.	Inside Dimensions L × W × D		No. Per Bundle	No. Per Pallet
R184	12 × 9 1/2 × 8		25	1050
TW184	12 × 9 1/2 × 8		25	1050
R185	12 × 9 1/2 × 12		25	500
TW185	12 × 9 1/2 × 12		25	500
R380	12 × 9 1/2 × 16		25	500
TW380	12 × 9 1/2 × 16		25	500
R367	12 × 10 × 3		25	1050
TW367	12 × 10 × 3		25	1050
R18	12 × 10 × 4		25	1050
TW18	12 × 10 × 4		25	1050
R57	12 × 10 × 6		25	1050
TW57	12 × 10 × 6		25	1050
R88	12 × 10 × 8		25	1050
TW88	12 × 10 × 8		25	1050
R706	12 × 10 × 9		25	500
TW706	12 × 10 × 9		25	500
R187	12 × 10 × 10		25	500
TW187	12 × 10 × 10		25	500
R368	12 × 11 × 4		25	700
TW368	12 × 11 × 4		25	700
R369	12 × 12 × 2		25	1050
TW369	12 × 12 × 2		25	1050
R189	12 × 12 × 3		25	700
TW189	12 × 12 × 3		25	700
R58	12 × 12 × 4		25	700
TW58	12 × 12 × 4		25	700
R156	12 × 12 × 5		25	700
TW156	12 × 12 × 5		25	700
R19	12 × 12 × 6		25	500
TW19	12 × 12 × 6		25	500
R685	12 × 12 × 7		25	500
TW685	12 × 12 × 7		25	500
R89	12 × 12 × 8		25	500
TW89	12 × 12 × 8		25	500
R86	12 × 12 × 9		25	500
TW86	12 × 12 × 9		25	500
R90	12 × 12 × 10		25	500
TW90	12 × 12 × 10		25	500
R302	12 × 12 × 11		25	500
TW302	12 × 12 × 11		25	500
R20	12 × 12 × 12		25	500
TW20	12 × 12 × 12		25	500
R733	12 × 12 × 12	(Heavy Duty)	25	500
R678	12 × 12 × 12	(Doublewall)	15	300
TW678	12 × 12 × 12	(Doublewall)	15	300
R268	12 × 12 × 15		25	500
TW268	12 × 12 × 15		25	500
R157	12 × 12 × 17 1/2		25	500
TW157	12 × 12 × 17 1/2		25	500
R370	12 × 12 × 20		20	240
TW370	12 × 12 × 20		20	240
R735	12 × 12 × 24		25	250
R371	12 × 12 × 25		20	240
TW371	12 × 12 × 25		20	240
R160	12 × 12 × 30		20	240
TW160	12 × 12 × 30		20	240
R736	12 × 12 × 36		15	270
R372	12 × 12 × 40		15	270
TW372	12 × 12 × 40		15	270
R373	12 × 12 × 48		15	270
TW373	12 × 12 × 48		15	270
R737	12 × 12 × 56		10	260
R65	12 1/4 × 9 1/8 × 5 7/8		25	1050
TW65	12 1/4 × 9 1/8 × 5 7/8		25	1050
R374	12 1/4 × 9 1/4 × 6 1/4		25	1050
TW374	12 1/4 × 9 1/4 × 6 1/4		25	1050
R699	12 1/4 × 9 1/4 × 9		25	700
TW699	12 1/4 × 9 1/4 × 9		25	700
R375	12 1/4 × 9 1/4 × 12 1/2		25	500
TW375	12 1/4 × 9 1/4 × 12 1/2		25	500

Stock No.	Inside Dimensions L × W × D		No. Per Bundle	No. Per Pallet
R172	$12\frac{1}{4} \times 9\frac{1}{4} \times 15$		25	500
TW172	$12\frac{1}{4} \times 9\frac{1}{4} \times 15$		25	500
R21	$12\frac{1}{4} \times 10\frac{1}{2} \times 8$		25	500
TW21	$12\frac{1}{4} \times 10\frac{1}{2} \times 8$		25	500
R739	$12\frac{1}{4} \times 11 \times 7\frac{9}{16}$		25	500
R740	$12\frac{1}{4} \times 11 \times 10\frac{3}{8}$		25	500
R863	$12\frac{1}{4} \times 12\frac{1}{4} \times 12$	(x-scores 10")	25	500
R175	$12\frac{3}{8} \times 12\frac{3}{8} \times 4\frac{1}{2}$		25	500
TW175	$12\frac{3}{8} \times 12\frac{3}{8} \times 4\frac{1}{2}$		25	500
R741	$12\frac{3}{8} \times 12\frac{3}{8} \times 6\frac{1}{2}$		25	500
R376	$12\frac{1}{2} \times 7 \times 7$		25	1050
TW376	$12\frac{1}{2} \times 7 \times 7$		25	1050
R742	$12\frac{1}{2} \times 9\frac{5}{8} \times 9$		25	700
R811	$12\frac{1}{2} \times 12\frac{1}{2} \times 4$		25	700
R378	$12\frac{1}{2} \times 12\frac{1}{2} \times 8$	(Record Size)	25	500
TW378	$12\frac{1}{2} \times 12\frac{1}{2} \times 8$	(Record Size)	25	500
R379	$12\frac{1}{2} \times 12\frac{1}{2} \times 10\frac{1}{2}$	(Record Size)	25	500
TW379	$12\frac{1}{2} \times 12\frac{1}{2} \times 10\frac{1}{2}$	(Record Size)	25	500
TW115	$12\frac{3}{4} \times 6\frac{3}{8} \times 13\frac{1}{2}$	(TW6, 4 Pack Master)	25	700
R22	$12\frac{3}{4} \times 9\frac{9}{16} \times 8\frac{11}{16}$		25	700
TW22	$12\frac{3}{4} \times 9\frac{9}{16} \times 8\frac{11}{16}$		25	700
R67	$12\frac{3}{4} \times 12\frac{3}{4} \times 13\frac{1}{2}$	(R6, 8 Pack Master)	25	500
TW67	$12\frac{3}{4} \times 12\frac{3}{4} \times 13\frac{1}{2}$	(TW6, 8 Pack Master)	25	500
R298	$12\frac{7}{8} \times 8\frac{9}{16} \times 5$		25	1050
TW298	$12\frac{7}{8} \times 8\frac{9}{16} \times 5$		25	1050
TW23	$12\frac{15}{16} \times 8\frac{11}{16} \times 6\frac{7}{8}$		25	1050
TW295	$13 \times 8 \times 8$		25	1050
R743	$13 \times 8\frac{5}{8} \times 8$		25	1050
R320	$13 \times 8\frac{5}{8} \times 9\frac{7}{8}$		25	700
TW320	$13 \times 8\frac{5}{8} \times 9\frac{7}{8}$		25	700
R813	$13 \times 9 \times 3\frac{3}{4}$		25	1050
R744	$13 \times 9 \times 4\frac{3}{4}$		25	1050
R381	$13 \times 9 \times 5\frac{1}{2}$		25	1050
TW381	$13 \times 9 \times 5\frac{1}{2}$		25	1050
R382	$13 \times 9 \times 7$		25	1050
TW382	$13 \times 9 \times 7$		25	1050
R383	$13 \times 9 \times 8\frac{1}{2}$		25	700
TW383	$13 \times 9 \times 8\frac{1}{2}$		25	700
R384	$13 \times 9 \times 11$		25	500
TW384	$13 \times 9 \times 11$		25	500
TW113	$13 \times 10 \times 2$		25	1050
R161	$13 \times 10 \times 4$		25	1050
TW161	$13 \times 10 \times 4$		25	1050
R385	$13 \times 10\frac{1}{4} \times 10$		25	500
TW385	$13 \times 10\frac{1}{4} \times 10$		25	500
R707	$13 \times 11 \times 5$		25	700
TW707	$13 \times 11 \times 5$		25	700
R838	$13 \times 11 \times 9$		25	500
R386	$13 \times 13 \times 4\frac{1}{2}$		25	500
TW386	$13 \times 13 \times 4\frac{1}{2}$		25	500
R592	$13 \times 13 \times 7\frac{1}{2}$		25	500
TW592	$13 \times 13 \times 7\frac{1}{2}$		25	500
R76	$13 \times 13 \times 10$		25	500
TW76	$13 \times 13 \times 10$		25	500
R269	$13 \times 13 \times 13$		25	500
TW269	$13 \times 13 \times 13$		25	500
R186	$13\frac{3}{8} \times 13\frac{3}{8} \times 12$		25	500
TW186	$13\frac{3}{8} \times 13\frac{3}{8} \times 12$		25	500
TW388	$13\frac{1}{2} \times 7\frac{1}{2} \times 13\frac{1}{2}$		25	500
R389	$13\frac{1}{2} \times 8\frac{1}{2} \times 10\frac{1}{2}$		25	500
TW389	$13\frac{1}{2} \times 8\frac{1}{2} \times 10\frac{1}{2}$		25	500
R745	$13\frac{1}{2} \times 9\frac{1}{4} \times 5\frac{7}{8}$		25	1050
R24	$13\frac{1}{2} \times 12\frac{1}{2} \times 10\frac{1}{4}$		25	500
TW24	$13\frac{1}{2} \times 12\frac{1}{2} \times 10\frac{1}{4}$		25	500
R25	$13\frac{1}{2} \times 13\frac{1}{2} \times 7\frac{1}{2}$		25	500
TW25	$13\frac{1}{2} \times 13\frac{1}{2} \times 7\frac{1}{2}$		25	500
R1030	$13\frac{5}{8} \times 6\frac{3}{4} \times 7\frac{3}{4}$		25	1050
R290	$13\frac{5}{8} \times 7 \times 7\frac{5}{8}$		25	1050
TW290	$13\frac{5}{8} \times 7 \times 7\frac{5}{8}$		25	1050
R26	$13\frac{3}{4} \times 10\frac{1}{4} \times 9$		25	500

Stock No.	Inside Dimensions L × W × D		No. Per Bundle	No. Per Pallet
TW26	$13\frac{3}{4} \times 10\frac{1}{4} \times 9$		25	500
R164	$13\frac{7}{8} \times 11\frac{1}{4} \times 10\frac{1}{4}$		25	500
TW164	$13\frac{7}{8} \times 11\frac{1}{4} \times 10\frac{1}{4}$		25	500
R28	$13\frac{15}{16} \times 9\frac{9}{16} \times 7\frac{1}{2}$		25	1050
TW28	$13\frac{15}{16} \times 9\frac{9}{16} \times 7\frac{1}{2}$		25	1050
R191	$14 \times 6 \times 4$		25	1750
TW191	$14 \times 6 \times 4$		25	1750
R136	$14 \times 6 \times 6$		25	1400
TW136	$14 \times 6 \times 6$		25	1400
R192	$14 \times 7 \times 7$		25	1050
TW192	$14 \times 7 \times 7$		25	1050
R49	$14 \times 8 \times 6$		25	1050
TW49	$14 \times 8 \times 6$		25	1050
R193	$14 \times 8 \times 8$		25	1050
TW193	$14 \times 8 \times 8$		25	1050
R194	$14 \times 9 \times 9$		25	500
TW194	$14 \times 9 \times 9$		25	500
R29	$14 \times 10 \times 4$		25	1050
TW29	$14 \times 10 \times 4$		25	1050
R91	$14 \times 10 \times 6$		25	1050
TW91	$14 \times 10 \times 6$		25	1050
R195	$14 \times 10 \times 8$		25	750
TW195	$14 \times 10 \times 8$		25	750
R27	$14 \times 10 \times 10$		25	500
TW27	$14 \times 10 \times 10$		25	500
R390	$14 \times 10 \times 12$		25	500
TW390	$14 \times 10 \times 12$		25	500
R196	$14 \times 11 \times 3$		25	1050
TW196	$14 \times 11 \times 3$		25	1050
R165	$14 \times 12 \times 4$		25	500
TW165	$14 \times 12 \times 4$		25	500
R30	$14 \times 12 \times 6$		25	500
TW30	$14 \times 12 \times 6$		25	500
R746	$14 \times 12 \times 8\frac{1}{2}$	(x-scores $2\frac{1}{2}$",$4\frac{1}{2}$",$6\frac{1}{2}$")	25	500
R166	$14 \times 12 \times 9\frac{1}{8}$		25	500
TW166	$14 \times 12 \times 9\frac{1}{8}$		25	500
R391	$14 \times 12 \times 12$		25	500
TW391	$14 \times 12 \times 12$		25	500
TW651	$14 \times 12 \times 46$	(Golf Club)	15	270
R1042	$14 \times 14 \times 4$		25	500
R392	$14 \times 14 \times 5$		25	500
TW392	$14 \times 14 \times 5$		25	500
R92	$14 \times 14 \times 6$		25	500
TW92	$14 \times 14 \times 6$		25	500
R198	$14 \times 14 \times 7$		25	500
TW198	$14 \times 14 \times 7$		25	500
R138	$14 \times 14 \times 8$		25	500
TW138	$14 \times 14 \times 8$		25	500
R308	$14 \times 14 \times 9$		25	500
TW308	$14 \times 14 \times 9$		25	500
R50	$14 \times 14 \times 10$		25	500
TW50	$14 \times 14 \times 10$		25	500
R105	$14 \times 14 \times 12$		25	500
TW105	$14 \times 14 \times 12$		25	500
R31	$14 \times 14 \times 14$		25	500
TW31	$14 \times 14 \times 14$		25	500
R747	$14 \times 14 \times 14$	**(Heavy Duty)**	20	480
R1006	$14 \times 14 \times 14$	**(Doublewall)**	15	150
R173	$14 \times 14 \times 18$		20	240
TW173	$14 \times 14 \times 18$		20	240
TW686	$14 \times 14 \times 20$		20	240
R393	$14 \times 14 \times 24$		20	240
TW393	$14 \times 14 \times 24$		20	240
R748	$14 \times 14 \times 30$		20	240
R749	$14 \times 14 \times 36$		15	270
TW687	$14\frac{1}{8} \times 8\frac{5}{8} \times 4$		25	1050
TW688	$14\frac{1}{8} \times 8\frac{5}{8} \times 10$		25	500
R750	$14\frac{1}{8} \times 8\frac{5}{8} \times 12$	(x-scores 6",8",10")	25	500
TW689	$14\frac{1}{8} \times 8\frac{5}{8} \times 12$		25	500
R394	$14\frac{1}{8} \times 11\frac{3}{4} \times 6\frac{5}{16}$		25	500

Stock No.	Inside Dimensions L × W × D		No. Per Bundle	No. Per Pallet
TW394	$14\frac{1}{8} \times 11\frac{3}{4} \times 6\frac{5}{16}$		25	500
R395	$14\frac{1}{2} \times 9\frac{1}{2} \times 12$		25	500
TW395	$14\frac{1}{2} \times 9\frac{1}{2} \times 12$		25	500
R751	$14\frac{1}{2} \times 10 \times 9$		25	500
TW174	$14\frac{1}{2} \times 13 \times 4\frac{1}{2}$		25	500
R752	$14\frac{3}{4} \times 12\frac{1}{4} \times 5\frac{7}{8}$		25	500
R753	$14\frac{3}{4} \times 12\frac{1}{4} \times 10\frac{3}{8}$		25	500
R199	15 × 7 × 5		25	1400
TW199	15 × 7 × 5		25	1400
R106	15 × 8 × 7		25	1050
TW106	15 × 8 × 7		25	1050
R396	15 × 9 × 8		25	700
TW396	15 × 9 × 8		25	700
R397	$15 \times 9\frac{1}{4} \times 6$		25	1050
TW397	$15 \times 9\frac{1}{4} \times 6$		25	1050
R757	$15 \times 9\frac{3}{4} \times 6\frac{1}{4}$		25	700
R754	$15 \times 9\frac{3}{4} \times 8\frac{1}{2}$		25	500
R755	$15 \times 9\frac{3}{4} \times 11\frac{5}{8}$		25	500
R122	15 × 10 × 5		25	700
TW122	15 × 10 × 5		25	700
R756	15 × 10 × 14		25	500
R200	15 × 11 × 7		25	500
TW200	15 × 11 × 7		25	500
R839	15 × 11 × 11		25	500
R287	15 × 12 × 4		25	750
TW287	15 × 12 × 4		25	750
R275	15 × 12 × 8		25	500
TW275	15 × 12 × 8		25	500
R278	15 × 12 × 10		25	500
TW278	15 × 12 × 10		25	500
R398	15 × 12 × 12		25	500
TW398	15 × 12 × 12		25	500
R1052	15 × 13 × 7		25	500
R758	15 × 15 × 4		25	500
R305	15 × 15 × 5		25	500
TW305	15 × 15 × 5		25	500
R501	15 × 15 × 6		25	375
TW501	15 × 15 × 6		25	375
R32	15 × 15 × 10		25	250
TW32	15 × 15 × 10		25	250
R176	15 × 15 × 12		25	250
TW176	15 × 15 × 12		25	250
R139	15 × 15 × 15		20	240
TW139	15 × 15 × 15		20	240
TW677	15 × 15 × 15	(Doublewall)	10	160
R107	15 × 15 × 20		20	240
TW107	15 × 15 × 20		20	240
R502	15 × 15 × 30		15	135
TW502	15 × 15 × 30		15	135
R759	15 × 15 × 36		15	135
R760	15 × 15 × 40		15	135
*R761	15 × 15 × 56		10	130
R506	$15\frac{1}{8} \times 8\frac{3}{4} \times 10\frac{1}{4}$		25	500
TW506	$15\frac{1}{8} \times 8\frac{3}{4} \times 10\frac{1}{4}$		25	500
R509	$15\frac{1}{8} \times 11\frac{1}{4} \times 10\frac{1}{4}$		25	500
TW509	$15\frac{1}{8} \times 11\frac{1}{4} \times 10\frac{1}{4}$		25	500
R861	$15\frac{1}{4} \times 10\frac{1}{8} \times 9\frac{5}{8}$ (x-score at $7\frac{5}{8}$")		25	500
R510	$15\frac{1}{2} \times 14\frac{1}{2} \times 10\frac{1}{2}$		20	240
TW510	$15\frac{1}{2} \times 14\frac{1}{2} \times 10\frac{1}{2}$		20	240
R511	$15\frac{3}{4} \times 10\frac{3}{4} \times 6\frac{3}{8}$		25	500
TW511	$15\frac{3}{4} \times 10\frac{3}{4} \times 6\frac{3}{8}$		25	500
R762	$15\frac{3}{4} \times 10\frac{3}{4} \times 9\frac{1}{2}$		25	500
R512	$15\frac{3}{4} \times 10\frac{3}{4} \times 12\frac{5}{8}$		25	500
TW512	$15\frac{3}{4} \times 10\frac{3}{4} \times 12\frac{5}{8}$		25	500
R763	$15\frac{3}{4} \times 10\frac{3}{4} \times 15\frac{5}{8}$		25	500
R202	16 × 5 × 5		25	1400
TW202	16 × 5 × 5		25	1400
R764	16 × 6 × 4		25	1000
R513	16 × 6 × 6		25	1000
TW513	16 × 6 × 6		25	1000

Stock No.	Inside Dimensions L × W × D		No. Per Bundle	No. Per Pallet
R203	16 × 7 × 7		25	750
TW203	16 × 7 × 7		25	750
R832	16 × 8 × 4		25	750
R514	16 × 8 × 6		25	750
TW514	16 × 8 × 6		25	750
R93	16 × 8 × 8		25	500
TW93	16 × 8 × 8		25	500
R312	16 × 9 × 3		25	1000
TW312	16 × 9 × 3		25	1000
R204	16 × 10 × 6		25	750
TW204	16 × 10 × 6		25	750
R205	16 × 10 × 8		25	500
TW205	16 × 10 × 8		25	500
R94	16 × 10 × 10		25	500
TW94	16 × 10 × 10		25	500
TW515	16 × 11 × 9		25	500
R180	16 × 11 × 10		25	500
TW180	16 × 11 × 10		25	500
R516	16 × 12 × 4		25	500
TW516	16 × 12 × 4		25	500
R517	16 × 12 × 6		25	500
TW517	16 × 12 × 6		25	500
R518	16 × 12 × 8		25	500
TW518	16 × 12 × 8		25	500
R519	16 × 12 × 10		25	500
TW519	16 × 12 × 10		25	500
R206	16 × 12 × 12		25	500
TW206	16 × 12 × 12		25	500
R873	16 × 12 × 12	(Doublewall)	15	300
R121	$16 \times 12\frac{3}{4} \times 12\frac{3}{4}$	(1.5 Cu. Ft.)	25	500
TW121	$16 \times 12\frac{3}{4} \times 12\frac{3}{4}$	(1.5 Cu. Ft.)	25	500
R520	16 × 14 × 4		25	500
TW520	16 × 14 × 4		25	500
R1038	16 × 14 × 5		25	500
R33	16 × 14 × 6		25	500
TW33	16 × 14 × 6		25	500
R708	16 × 14 × 8		25	250
TW708	16 × 14 × 8		25	250
R709	16 × 14 × 10		25	250
TW709	16 × 14 × 10		25	250
R522	16 × 14 × 12		20	240
TW522	16 × 14 × 12		20	240
R223	16 × 16 × 4		25	500
TW223	16 × 16 × 4		25	500
R207	16 × 16 × 6		25	500
TW207	16 × 16 × 6		25	500
R208	16 × 16 × 8		25	250
TW208	16 × 16 × 8		25	250
R362	16 × 16 × 9		20	240
R80	16 × 16 × 10		20	240
TW80	16 × 16 × 10		20	240
R1020	16 × 16 × 11		20	240
R209	16 × 16 × 12		20	240
TW209	16 × 16 × 12		20	240
R34	16 × 16 × 16		20	240
TW34	16 × 16 × 16		20	240
R765	16 × 16 × 16	(Heavy Duty)	15	270
R670	16 × 16 × 16	(Doublewall)	10	160
TW670	16 × 16 × 16	(Doublewall)	10	160
R523	16 × 16 × 19		15	270
TW523	16 × 16 × 19		15	270
R377	16 × 16 × 26		15	135
R766	16 × 16 × 34		15	135
R313	16 × 16 × 36		10	130
TW313	16 × 16 × 36		10	130
R767	$16\frac{1}{8} \times 10\frac{3}{4} \times 8$		25	500
R35	$16\frac{1}{8} \times 12\frac{1}{16} \times 9\frac{1}{4}$		25	500
R524	$16\frac{1}{4} \times 12\frac{1}{4} \times 11\frac{3}{16}$		25	500
TW524	$16\frac{1}{4} \times 12\frac{1}{4} \times 11\frac{3}{16}$		25	500
TW310	$16\frac{1}{2} \times 9 \times 9$		25	500

*Exceeds U.S. Postal Service 108" max.

Stock No.	Inside Dimensions L × W × D		No. Per Bundle	No. Per Pallet
R36	16 1/2 × 10 7/8 × 7 3/4		25	500
TW36	16 1/2 × 10 7/8 × 7 3/4		25	500
R525	16 5/8 × 14 1/4 × 12 1/8		20	240
TW525	16 5/8 × 14 1/4 × 12 1/8		20	240
TW526	16 5/8 × 14 1/4 × 24		15	270
TW114	16 3/4 × 8 3/8 × 17 1/2	(TW11, 4 Pack Master)	25	500
R875	16 3/4 × 12 1/2 × 12 1/2		25	500
R1	16 3/4 × 16 3/4 × 17 1/2	(R11, 8 Pack Master)	15	270
TW1	16 3/4 × 16 3/4 × 17 1/2	(TW11, 8 Pack Master)	15	270
R769	17 × 7 × 7		25	750
R527	17 × 9 × 9		25	500
TW527	17 × 9 × 9		25	500
R692	17 × 10 × 6		25	500
TW692	17 × 10 × 6		25	500
TW693	17 × 10 × 7		25	500
R770	17 × 11 × 2 5/8		25	500
R684	17 × 14 × 5		25	500
TW684	17 × 14 × 5		25	500
R528	17 × 14 × 9		20	240
TW528	17 × 14 × 9		20	240
R771	17 × 15 × 8 1/2	(x-scores 2 1/2",4 1/2",6 1/2")	25	250
R272	17 × 17 × 17		15	270
TW272	17 × 17 × 17		15	270
R772	17 1/8 × 11 7/8 × 10		25	500
R1001	17 1/4 × 11 1/8 × 8 3/4	(Letterhead)	25	500
R1029	17 1/4 × 11 1/4 × 10 1/4	(Letterhead)	25	500
R860	17 1/4 × 12 3/4 × 5 7/8		25	500
R71	17 1/4 × 13 × 4 7/8		25	500
TW71	17 1/4 × 13 × 4 7/8		25	500
R1004	17 1/4 × 14 1/4 × 10 3/4	(Letterhead)	25	250
R1010	17 1/4 × 14 1/4 × 12 1/2	(Letterhead)	25	250
R529	17 1/4 × 17 1/4 × 8		20	240
TW529	17 1/4 × 17 1/4 × 8		20	240
R233	17 1/4 × 17 1/4 × 11		15	270
TW233	17 1/4 × 17 1/4 × 11		15	270
R531	17 1/4 × 17 1/4 × 14 1/2		15	270
TW531	17 1/4 × 17 1/4 × 14 1/2		15	270
R1003	17 1/2 × 11 1/4 × 11 1/4	(Letterhead)	25	500
R273	17 1/2 × 11 1/2 × 8 3/4	(Letterhead)	25	500
TW273	17 1/2 × 11 1/2 × 8 3/4	(Letterhead)	25	500
TW691	17 1/2 × 11 1/2 × 9 1/2	(Letterhead)	25	500
R773	17 1/2 × 11 1/2 × 10 1/4	(Letterhead)	25	500
R532	17 1/2 × 11 1/2 × 10 3/4	(Letterhead)	25	500
TW532	17 1/2 × 11 1/2 × 10 3/4	(Letterhead)	25	500
R387	17 1/2 × 11 1/2 × 11		25	500
R70	17 1/2 × 11 1/2 × 11 1/2	(Letterhead)	25	500
TW70	17 1/2 × 11 1/2 × 11 1/2	(Letterhead)	25	500
R774	17 1/2 × 11 1/2 × 11 1/2	**(HD)** (Letterhead)	25	500
R274	17 1/2 × 11 1/2 × 14 1/4	(Letterhead)	25	500
TW274	17 1/2 × 11 1/2 × 14 1/4	(Letterhead)	25	500
R152	17 3/4 × 11 1/2 × 12 1/2		25	500
TW152	17 3/4 × 11 1/2 × 12 1/2		25	500
TW399	17 3/4 × 14 1/2 × 10 3/4	(Letterhead)	25	250
R1013	17 3/4 × 14 1/2 × 11 1/8	(Letterhead)	25	250
R188	17 3/4 × 14 1/2 × 12 1/2	(Letterhead)	25	250
TW188	17 3/4 × 14 1/2 × 12 1/2	(Letterhead)	25	250
R210	18 × 6 × 6		25	750
TW210	18 × 6 × 6		25	750
R533	18 × 8 × 6		25	750
TW533	18 × 8 × 6		25	750
R211	18 × 9 × 9		25	500
TW211	18 × 9 × 9		25	500
R534	18 × 10 × 6		25	500
TW534	18 × 10 × 6		25	500
R212	18 × 10 × 10		25	500
TW212	18 × 10 × 10		25	500
R776	18 × 11 × 5 7/8	**(Heavy Duty)**	25	500
R777	18 × 11 × 10 3/8	**(Heavy Duty)**	25	500
R535	18 × 12 × 5		25	500
TW535	18 × 12 × 5		25	500

Stock No.	Inside Dimensions L × W × D		No. Per Bundle	No. Per Pallet
R190	18 × 12 × 6		25	500
TW190	18 × 12 × 6		25	500
R213	18 × 12 × 8		25	500
TW213	18 × 12 × 8		25	500
R536	18 × 12 × 9		25	500
TW536	18 × 12 × 9		25	500
R537	18 × 12 × 10		25	500
TW537	18 × 12 × 10		25	500
R270	18 × 12 × 12		25	500
TW270	18 × 12 × 12		25	500
R775	18 × 12 × 12	**(Heavy Duty)**	20	240
R1005	18 × 12 × 12	**(Doublewall)**	15	150
TW279	18 × 12 3/4 × 10		25	500
TW538	18 × 13 × 11		25	250
R37	18 × 13 × 12		25	250
TW37	18 × 13 × 12		25	250
R539	18 × 14 × 4		25	500
TW539	18 × 14 × 4		25	500
R540	18 × 14 × 6		25	375
TW540	18 × 14 × 6		25	375
R541	18 × 14 × 8		25	250
TW541	18 × 14 × 8		25	250
R542	18 × 14 × 10		25	250
TW542	18 × 14 × 10		25	250
R543	18 × 14 × 12		25	250
TW543	18 × 14 × 12		25	250
R1011	18 × 14 × 12	**(Doublewall)**	15	150
R778	18 × 14 3/4 × 7 9/16	**(Heavy Duty)**	20	240
R779	18 × 14 3/4 × 15 7/8	**(Heavy Duty)**	15	270
R544	18 × 16 × 4		20	360
TW544	18 × 16 × 4		20	360
R545	18 × 16 × 6		20	240
TW545	18 × 16 × 6		20	240
R710	18 × 16 × 8		20	240
TW710	18 × 16 × 8		20	240
R546	18 × 16 × 10		20	240
TW546	18 × 16 × 10		20	240
R291	18 × 16 × 12		15	270
TW291	18 × 16 × 12		15	270
R214	18 × 18 × 4		25	250
TW214	18 × 18 × 4		25	250
R140	18 × 18 × 6		25	250
TW140	18 × 18 × 6		25	250
R111	18 × 18 × 8		20	240
TW111	18 × 18 × 8		20	240
R197	18 × 18 × 10		15	270
TW197	18 × 18 × 10		15	270
R95	18 × 18 × 12		15	270
TW95	18 × 18 × 12		15	270
R201	18 × 18 × 15		15	270
TW201	18 × 18 × 15		15	270
R296	18 × 18 × 16	(3.02 Cu. Ft.)	15	270
TW296	18 × 18 × 16	(3.02 Cu. Ft.)	15	270
R96	18 × 18 × 18		15	135
TW96	18 × 18 × 18		15	135
R780	18 × 18 × 18	**(Heavy Duty)**	10	120
R671	18 × 18 × 18	**(Doublewall)**	10	80
TW671	18 × 18 × 18	**(Doublewall)**	10	80
R711	18 × 18 × 24		15	135
TW711	18 × 18 × 24		15	135
R1037	18 × 18 × 27	**(Doublewall)**	5	80
R39	18 1/4 × 16 1/2 × 10 3/8		20	240
TW39	18 1/4 × 16 1/2 × 10 3/8		20	240
R38	18 5/16 × 12 1/4 × 9 5/16		25	500
TW38	18 5/16 × 12 1/4 × 9 5/16		25	500
TW286	18 1/2 × 11 1/2 × 3		25	500
R547	18 1/2 × 18 1/2 × 10 1/2		15	270
TW547	18 1/2 × 18 1/2 × 10 1/2		15	270
R81	18 1/2 × 18 1/2 × 12		15	270
TW81	18 1/2 × 18 1/2 × 12		15	270

BOXES • STOCK RSC

Stock No.	Inside Dimensions L × W × D		No. Per Bundle	No. Per Pallet
R548	18 1/2 × 18 1/2 × 16 1/2		15	135
TW548	18 1/2 × 18 1/2 × 16 1/2		15	135
R41	18 1/2 × 18 1/2 × 20 1/2	(4.1 Cu. Ft.)	15	135
TW41	18 1/2 × 18 1/2 × 20 1/2	(4.1 Cu. Ft.)	15	135
R549	18 1/2 × 18 1/2 × 30 1/2		10	130
TW549	18 1/2 × 18 1/2 × 30 1/2		10	130
*R781	18 1/2 × 18 1/2 × 36		10	130
R40	18 5/8 × 12 1/2 × 7		25	500
TW40	18 5/8 × 12 1/2 × 7		25	500
R782	18 5/8 × 12 1/2 × 7 1/2		25	500
R783	18 3/4 × 10 3/4 × 9 1/2		25	500
R218	19 × 6 × 4		25	1000
TW218	19 × 6 × 4		25	1000
R219	19 × 7 × 7		25	750
TW219	19 × 7 × 7		25	750
R108	19 × 8 × 8		25	500
TW108	19 × 8 × 8		25	500
R550	19 × 12 × 3		25	500
TW550	19 × 12 × 3		25	500
R784	19 × 12 × 4		25	500
R551	19 × 12 1/2 × 13 3/4	(#6 3/4 Envelope)	25	250
TW551	19 × 12 1/2 × 13 3/4	(#6 3/4 Envelope)	25	250
R785	19 × 14 × 14 3/4	(x-score 12 3/4")	25	250
R552	19 × 14 1/4 × 12		25	250
TW552	19 × 14 1/4 × 12		25	250
R786	19 × 14 1/4 × 23 7/8		15	135
R553	19 × 15 × 6		25	375
TW553	19 × 15 × 6		25	375
R787	19 3/4 × 14 3/4 × 10 1/8		25	250
R554	19 3/4 × 15 × 13		20	240
TW554	19 3/4 × 15 × 13		20	240
R220	20 × 4 × 4		25	1750
TW220	20 × 4 × 4		25	1750
TW556	20 × 5 × 5		25	1400
R557	20 × 6 × 6		25	500
TW557	20 × 6 × 6		25	500
R217	20 × 8 × 8		25	500
TW217	20 × 8 × 8		25	500
R696	20 × 10 × 6		25	500
TW696	20 × 10 × 6		25	500
R224	20 × 10 × 8		25	500
TW224	20 × 10 × 8		25	500
R225	20 × 10 × 10		25	500
TW225	20 × 10 × 10		25	500
R309	20 × 12 × 6		25	500
TW309	20 × 12 × 6		25	500
R558	20 × 12 × 8		25	375
TW558	20 × 12 × 8		25	375
R788	20 × 12 × 10		25	250
R227	20 × 12 × 12		25	500
TW227	20 × 12 × 12		25	500
TW679	20 × 12 × 12	**(Doublewall)**	10	160
R734	20 × 12 × 16		20	240
R559	20 × 13 × 10		25	250
TW559	20 × 13 × 10		25	250
R560	20 × 14 × 6		25	375
TW560	20 × 14 × 6		25	375
R882	20 × 14 × 8	**(Doublewall)**	15	150
R182	20 × 14 × 10		25	250
TW182	20 × 14 × 10		25	250
R277	20 × 14 × 12	(#6 3/4 Envelope)	25	250
TW277	20 × 14 × 12	(#6 3/4 Envelope)	25	250
R561	20 × 14 × 14		20	240
TW561	20 × 14 × 14		20	240
R789	20 × 15 × 8 1/2		25	250
R282	20 × 15 × 9		20	240
TW282	20 × 15 × 9		20	240
R229	20 × 15 × 15		20	240
TW229	20 × 15 × 15		20	240
R1021	20 × 16 × 8		25	250

Stock No.	Inside Dimensions L × W × D		No. Per Bundle	No. Per Pallet
R118	20 × 16 × 12		20	240
TW118	20 × 16 × 12		20	240
R562	20 × 16 × 14		20	240
TW562	20 × 16 × 14		20	240
R885	20 × 16 × 16		20	240
R1027	20 × 16 × 22		15	135
R790	20 × 18 × 22		15	135
R109	20 × 20 × 4		20	240
TW109	20 × 20 × 4		20	240
R563	20 × 20 × 6		20	240
TW563	20 × 20 × 6		20	240
R564	20 × 20 × 7		20	240
TW564	20 × 20 × 7		20	240
R712	20 × 20 × 8		15	270
TW712	20 × 20 × 8		15	270
R230	20 × 20 × 10		15	270
TW230	20 × 20 × 10		15	270
R1022	20 × 20 × 11		15	135
R566	20 × 20 × 12		15	135
TW566	20 × 20 × 12		15	135
R1019	20 × 20 × 13		15	135
R567	20 × 20 × 14		15	135
TW567	20 × 20 × 14		15	135
R42	20 × 20 × 15	(3.5 Cu. Ft.)	15	135
TW42	20 × 20 × 15	(3.5 Cu. Ft.)	15	135
R215	20 × 20 × 16		10	130
TW215	20 × 20 × 16		10	130
R44	20 × 20 × 18	(4.2 Cu. Ft.)	10	130
TW44	20 × 20 × 18	(4.2 Cu. Ft.)	10	130
R142	20 × 20 × 20	(4.6 Cu. Ft.)	10	130
TW142	20 × 20 × 20	(4.6 Cu. Ft.)	10	130
R791	20 × 20 × 20	**(Heavy Duty)**	10	130
R672	20 × 20 × 20	**(Doublewall)**	5	80
TW672	20 × 20 × 20	**(Doublewall)**	5	80
R508	20 × 20 × 24		10	130
R569	20 × 20 × 25	(Max. U.S. Postal Service)	10	130
TW569	20 × 20 × 25	(Max. U.S. Postal Service)	10	130
*R304	20 × 20 × 36		10	130
*TW304	20 × 20 × 36		10	130
*R221	20 × 20 × 40		5	135
*TW221	20 × 20 × 40		5	135
†*R888	20 × 20 × 48		5	135
R235	20 3/16 × 13 7/16 × 7 3/4		25	500
TW235	20 3/16 × 13 7/16 × 7 3/4		25	500
R793	20 1/2 × 20 1/2 × 10 1/4		15	270
R794	20 1/2 × 20 1/2 × 20 1/2		15	135
R555	21 × 8 × 8		25	500
R222	21 × 12 × 12		15	270
TW222	21 × 12 × 12		15	270
R570	21 × 14 × 14		15	270
TW570	21 × 14 × 14		15	270
R571	21 × 18 × 8 1/2		15	270
TW571	21 × 18 × 8 1/2		15	270
R1014	21 3/8 × 15 5/8 × 6 3/8		15	270
R572	21 3/8 × 15 5/8 × 6 5/8		15	270
TW572	21 3/8 × 15 5/8 × 6 5/8		15	270
R573	21 3/8 × 15 5/8 × 9 1/2		15	270
TW573	21 3/8 × 15 5/8 × 9 1/2		15	270
R574	21 3/8 × 15 5/8 × 12 5/8		15	270
TW574	21 3/8 × 15 5/8 × 12 5/8		15	270
R575	21 3/8 × 15 5/8 × 15 3/4		15	270
TW575	21 3/8 × 15 5/8 × 15 3/4		15	270
R530	21 3/8 × 15 5/8 × 18 5/8		15	135
TW530	21 3/8 × 15 5/8 × 18 5/8		15	135
R576	21 3/8 × 15 5/8 × 30 5/8		10	130
TW576	21 3/8 × 15 5/8 × 30 5/8		10	130
R285	21 3/8 × 16 5/8 × 12 1/8		15	270
TW285	21 3/8 × 16 5/8 × 12 1/8		15	270
R797	21 3/8 × 16 5/8 × 24		10	130
R300	21 1/2 × 10 5/8 × 15 1/2		20	240

*Exceeds U.S. Postal Service 108" max. †Exceeds U.P.S. 130" max.

Stock No.	Inside Dimensions L × W × D		No. Per Bundle	No. Per Pallet
TW300	21 1/2 × 10 5/8 × 15 1/2		**20**	**240**
TW577	21 3/4 × 12 1/2 × 9 7/8	(#10 Envelope)	**20**	**240**
R798	21 7/8 × 17 7/8 × 19 7/8	**(Heavy Duty)**	**10**	**130**
R578	22 × 6 × 6		**25**	**500**
TW578	22 × 6 × 6		**25**	**500**
R579	22 × 10 × 4		**25**	**500**
TW579	22 × 10 × 4		**25**	**500**
R231	22 × 10 × 9		**25**	**500**
TW231	22 × 10 × 9		**25**	**500**
R833	22 × 12 × 10		**25**	**250**
R1044	22 × 12 × 12		**25**	**250**
R580	22 × 13 1/2 × 10 3/4		**20**	**240**
TW580	22 × 13 1/2 × 10 3/4		**20**	**240**
R284	22 × 14 × 12		**15**	**270**
TW284	22 × 14 × 12		**15**	**270**
TW680	22 × 14 × 12	**(Doublewall)**	**10**	**160**
R144	22 × 14 × 14		**15**	**270**
TW144	22 × 14 × 14		**15**	**270**
R834	22 × 15 × 10		**20**	**240**
R1045	22 × 15 × 15		**15**	**270**
R581	22 × 17 × 12		**15**	**270**
TW581	22 × 17 × 12		**15**	**270**
R891	22 × 18 × 6		**20**	**240**
R330	22 × 18 × 16		**10**	**130**
TW330	22 × 18 × 16		**10**	**130**
R713	22 × 20 × 18 1/2		**10**	**130**
TW713	22 × 20 × 18 1/2		**10**	**130**
R690	22 × 22 × 6		**15**	**135**
TW690	22 × 22 × 6		**15**	**135**
R1024	22 × 22 × 7		**15**	**135**
R583	22 × 22 × 8		**15**	**270**
TW583	22 × 22 × 8		**15**	**270**
R584	22 × 22 × 10		**15**	**270**
TW584	22 × 22 × 10		**15**	**270**
R521	22 × 22 × 12		**10**	**130**
TW521	22 × 22 × 12		**10**	**130**
R585	22 × 22 × 16		**10**	**130**
TW585	22 × 22 × 16		**10**	**130**
R232	22 × 22 × 18		**10**	**130**
TW232	22 × 22 × 18		**10**	**130**
***R586**	22 × 22 × 22		**10**	**130**
***TW586**	22 × 22 × 22		**10**	**130**
***TW848**	22 × 22 × 22	**(Doublewall)**	**5**	**80**
***R234**	22 × 22 × 24		**10**	**130**
***TW234**	22 × 22 × 24		**10**	**130**
***R1035**	22 × 22 × 30		**10**	**130**
R799	22 1/16 × 17 3/4 × 10 1/16	**(Doublewall)**	**10**	**160**
R800	22 1/16 × 17 3/4 × 15 9/16	**(Doublewall)**	**10**	**80**
R803	22 1/4 × 18 × 7 9/16	**(Heavy Duty)**	**15**	**270**
R804	22 1/4 × 19 5/8 × 12 1/4		**15**	**135**
R805	22 1/2 × 22 1/2 × 13		**15**	**135**
TW840	23 × 4 1/2 × 27 1/4	**(HD FOL)** (Small Art)	**15**	**240**
R589	23 × 8 × 6		**25**	**500**
TW589	23 × 8 × 6		**25**	**500**
R590	23 × 12 × 3 1/2		**25**	**500**
TW590	23 × 12 × 3 1/2		**25**	**500**
R226	23 × 13 × 3 1/2		**20**	**360**
TW226	23 × 13 × 3 1/2		**20**	**360**
R591	23 × 14 × 10		**20**	**240**
TW591	23 × 14 × 10		**20**	**240**
R600	23 × 16 × 19		**10**	**130**
TW600	23 × 16 × 19		**10**	**130**
R612	23 × 23 × 15		**10**	**130**
***TW299**	23 × 23 × 20	(6.12 Cu. Ft.)	**10**	**130**
R601	23 1/2 × 14 × 4		**25**	**250**
TW601	23 1/2 × 14 × 4		**25**	**250**
R602	23 1/2 × 14 × 6		**20**	**360**
TW602	23 1/2 × 14 × 6		**20**	**360**
R87	23 1/2 × 16 × 14	(3.1 Cu. Ft.)	**15**	**270**
TW87	23 1/2 × 16 × 14	(3.1 Cu. Ft.)	**15**	**270**

Stock No.	Inside Dimensions L × W × D		No. Per Bundle	No. Per Pallet
R236	24 × 6 × 6		**25**	**500**
TW236	24 × 6 × 6		**25**	**500**
R228	24 × 8 × 6		**25**	**500**
TW228	24 × 8 × 6		**25**	**500**
R237	24 × 8 × 8		**25**	**500**
TW237	24 × 8 × 8		**25**	**500**
R806	24 × 9 × 9		**25**	**500**
R603	24 × 10 × 6		**25**	**500**
TW603	24 × 10 × 6		**25**	**500**
R238	24 × 10 × 8		**25**	**500**
TW238	24 × 10 × 8		**25**	**500**
R604	24 × 10 × 10		**20**	**360**
TW604	24 × 10 × 10		**20**	**360**
R807	24 × 10 × 15		**25**	**250**
R239	24 × 12 × 6		**20**	**360**
TW239	24 × 12 × 6		**20**	**360**
R178	24 × 12 × 8		**20**	**240**
TW178	24 × 12 × 8		**20**	**240**
R599	24 × 12 × 9		**25**	**250**
R605	24 × 12 × 11		**20**	**240**
TW605	24 × 12 × 11		**20**	**240**
R45	24 × 12 × 12	(2 Cu. Ft.)	**20**	**240**
TW45	24 × 12 × 12	(2 Cu. Ft.)	**20**	**240**
R808	24 × 12 × 12	**(Heavy Duty)**	**15**	**270**
R673	24 × 12 × 12	**(Doublewall)**	**10**	**160**
TW673	24 × 12 × 12	**(Doublewall)**	**10**	**160**
R252	24 × 13 1/8 × 12 3/4		**15**	**270**
TW252	24 × 13 1/8 × 12 3/4		**15**	**270**
R249	24 × 14 × 4		**20**	**360**
TW249	24 × 14 × 4		**20**	**360**
R606	24 × 14 × 8		**20**	**240**
TW606	24 × 14 × 8		**20**	**240**
R1033	24 × 14 × 10		**20**	**240**
R893	24 × 14 × 12		**20**	**240**
R292	24 × 14 × 14 3/8		**15**	**270**
TW292	24 × 14 × 14 3/8		**15**	**270**
R607	24 × 14 × 18		**15**	**270**
TW607	24 × 14 × 18		**15**	**270**
R253	24 × 14 × 20		**15**	**135**
TW253	24 × 14 × 20		**15**	**135**
R809	24 × 16 × 2 5/8		**25**	**250**
R608	24 × 16 × 4		**20**	**240**
TW608	24 × 16 × 4		**20**	**240**
R257	24 × 16 × 6		**20**	**240**
TW257	24 × 16 × 6		**20**	**240**
R895	24 × 16 × 8		**20**	**240**
R155	24 × 16 × 13		**15**	**270**
TW155	24 × 16 × 13		**15**	**270**
R276	24 × 16 × 24		**10**	**130**
TW276	24 × 16 × 24		**10**	**130**
R609	24 × 17 × 3		**20**	**240**
TW609	24 × 17 × 3		**20**	**240**
R46	24 × 17 × 15	(3.6 Cu. Ft.)	**15**	**270**
TW46	24 × 17 × 15	(3.6 Cu. Ft.)	**15**	**270**
R258	24 × 18 × 10		**15**	**270**
TW258	24 × 18 × 10		**15**	**270**
R260	24 × 18 × 12		**15**	**270**
TW260	24 × 18 × 12		**15**	**270**
R810	24 × 18 × 12	**(Heavy Duty)**	**10**	**120**
R110	24 × 18 × 18	(4.5 Cu. Ft.)	**15**	**135**
TW110	24 × 18 × 18	(4.5 Cu. Ft.)	**15**	**135**
R674	24 × 18 × 18	**(Doublewall)**	**5**	**80**
TW674	24 × 18 × 18	**(Doublewall)**	**5**	**80**
R1046	24 × 18 1/4 × 20		**10**	**130**
R611	24 × 20 × 12		**15**	**135**
TW611	24 × 20 × 12		**15**	**135**
TW846	24 × 22 × 12	**(HD)** (Stereo)	**10**	**120**
R500	24 × 24 × 6		**10**	**130**
TW500	24 × 24 × 6		**10**	**130**
R262	24 × 24 × 7		**10**	**130**

*Exceeds U.S. Postal Service 108" max.

Stock No.	Inside Dimensions L × W × D		No. Per Bundle	No. Per Pallet
TW262	24 × 24 × 7		10	130
R240	24 × 24 × 12		10	130
TW240	24 × 24 × 12		10	130
R613	24 × 24 × 16		10	130
TW613	24 × 24 × 16		10	130
*R241	24 × 24 × 18½		10	130
*TW241	24 × 24 × 18½		10	130
*R614	24 × 24 × 20		10	130
*TW614	24 × 24 × 20		10	130
*R141	24 × 24 × 24	(8 Cu. Ft.)	10	130
*R898	24 × 24 × 24	(x-scores 18",20",22")	10	130
*TW141	24 × 24 × 24	(8 Cu. Ft.)	10	130
*R675	24 × 24 × 24	**(Doublewall)**	5	80
*TW675	24 × 24 × 24	**(Doublewall)**	5	80
*R615	24 × 24 × 30		5	135
*TW615	24 × 24 × 30		5	135
†*R242	24 × 24 × 36	(12 Cu. Ft.)	5	135
†*TW242	24 × 24 × 36	(12 Cu. Ft.)	5	135
†*R681	24 × 24 × 36	**(Doublewall)**	5	80
†*TW681	24 × 24 × 36	**(Doublewall)**	5	80
†*TW616	24 × 24 × 48		5	135
R297	25 × 12 × 10		25	250
TW297	25 × 12 × 10		25	250
R835	25 × 15 × 12		20	240
R263	25 × 17 × 15		15	270
TW263	25 × 17 × 15		15	270
TW503	25 × 19 × 5		15	240
TW504	25 × 19 × 7		15	240
R850	25 × 19 × 10		15	135
R617	25 × 19 × 10½		15	135
TW617	25 × 19 × 10½		15	135
*R47	25 × 25 × 20		10	130
*TW47	25 × 25 × 20		10	130
TW78	25⅛ × 8⅜ × 17½	(TW11, 6 Pack Master)	25	250
R264	25½ × 13 × 13		20	240
TW264	25½ × 13 × 13		20	240
R812	25½ × 14 × 8⅛		25	250
*R505	25⅝ × 25⅝ × 25¼	(Max. U.P.S.)	5	135
*TW505	25⅝ × 25⅝ × 25¼	(Max. U.P.S.)	5	135
†*R1028	25⅝ × 25⅝ × 25¼	**(Doublewall)**	5	80
R618	26 × 12 × 12		20	240
TW618	26 × 12 × 12		20	240
R588	26 × 14 × 13		15	270
R814	26 × 15 × 3		25	250
R619	26 × 15 × 5		15	270
TW619	26 × 15 × 5		15	270
R620	26 × 15 × 7		15	270
TW620	26 × 15 × 7		15	270
R1017	26 × 16 × 10		15	270
R149	26 × 16 × 14		15	270
TW149	26 × 16 × 14		15	270
R621	26 × 16 × 19		10	130
TW621	26 × 16 × 19		10	130
R72	26 × 17 × 5		20	240
TW72	26 × 17 × 5		20	240
R700	26 × 18 × 12		10	260
TW700	26 × 18 × 12		10	260
*R623	26 × 26 × 20		5	135
*TW623	26 × 26 × 20		5	135
R243	27 × 14 × 9		20	240
TW243	27 × 14 × 9		20	240
R624	27 × 15 × 6½		15	270
TW624	27 × 15 × 6½		15	270
R625	27 × 23 × 8½	(x-scores at 2½",4½",6½")	10	130
TW625	27 × 23 × 8½	(x-scores at 2½",4½",6½")	10	130
†*R244	27 × 27 × 27		5	135
†*TW244	27 × 27 × 27		5	135
†*R815	27 × 27 × 36	**(Doublewall)**	5	80
R816	27⅝ × 15⅝ × 11⅜		15	270
TW841	28 × 5½ × 38	**(HD FOL)** (Med. Art)	10	120

Stock No.	Inside Dimensions L × W × D		No. Per Bundle	No. Per Pallet
R245	28 × 6 × 6		25	500
TW245	28 × 6 × 6		25	500
R1048	28 × 11 × 9		25	250
R314	28 × 16 × 3½		15	270
TW314	28 × 16 × 3½		15	270
R315	28 × 16 × 5		15	270
TW315	28 × 16 × 5		15	270
R316	28 × 16 × 7		15	270
TW316	28 × 16 × 7		15	270
TW317	28 × 16 × 9		15	270
R626	28 × 16 × 12		10	260
TW626	28 × 16 × 12		10	260
R627	28 × 16 × 14		10	260
TW627	28 × 16 × 14		10	260
*R630	28 × 28 × 12		5	135
*TW630	28 × 28 × 12		5	135
*R631	28 × 28 × 20		5	135
*TW631	28 × 28 × 20		5	135
†*R632	28 × 28 × 28		5	135
†*TW632	28 × 28 × 28		5	135
†*R1016	28 × 28 × 40		5	135
R565	29 × 10 × 9		25	250
R633	29 × 17 × 3		15	270
TW633	29 × 17 × 3		15	270
R634	29 × 17 × 7		15	270
TW634	29 × 17 × 7		15	270
R246	29 × 17 × 9		15	270
TW246	29 × 17 × 9		15	270
R635	29 × 17 × 12		10	130
TW635	29 × 17 × 12		10	130
R247	29 × 17 × 15		15	135
TW247	29 × 17 × 15		15	135
R1039	29 × 17 × 20		10	130
R1031	29½ × 14½ × 22½		10	130
R1025	30 × 13 × 13		15	270
TW254	30 × 14 × 3		20	360
R271	30 × 14 × 5		20	240
TW271	30 × 14 × 5		20	240
R280	30 × 14 × 7		15	270
TW280	30 × 14 × 7		15	270
R636	30 × 15 × 15		10	130
TW636	30 × 15 × 15		10	130
R817	30 × 15 × 15	**(Heavy Duty)**	10	130
R1007	30 × 15 × 15	**(Doublewall)**	10	80
TW301	30 × 17 × 3		20	240
R148	30 × 18 × 16		10	130
TW148	30 × 18 × 16		10	130
R1012	30 × 20 × 9		15	135
*TW851	30 × 20 × 20	**(Heavy Duty)**	5	125
*R1049	30 × 20 × 25		5	135
R256	30 × 24 × 10		10	130
TW256	30 × 24 × 10		10	130
R637	30 × 24 × 12		10	130
TW637	30 × 24 × 12		10	130
TW339	30 × 24 × 12	**(Doublewall)**	5	80
*R818	30 × 24 × 24	(Max. U.P.S.)	5	135
†*R303	30 × 30 × 30		5	135
†*TW303	30 × 30 × 30		5	135
†*R676	30 × 30 × 30	**(Doublewall)**	5	80
†*TW676	30 × 30 × 30	**(Doublewall)**	5	80
R48	30½ × 18½ × 18½		10	130
TW48	30½ × 18½ × 18½		10	130
R819	30½ × 18½ × 18½	**(Heavy Duty)**	5	135
*TW682	30½ × 18½ × 18½	**(Doublewall)**	5	80
R587	31 × 10 × 8		20	360
R638	31 × 16 × 9		10	260
TW638	31 × 16 × 9		10	260
R820	31 × 16 × 14		15	135
R649	31 × 24 × 8½	(x-scores at 2½",4½",6½")	10	130
TW649	31 × 24 × 8½	(x-scores at 2½",4½",6½")	10	130

*Exceeds U.S. Postal Service 108" max. †Exceeds U.P.S. 130" max.

Stock No.	Inside Dimensions L × W × D	No. Per Bundle	No. Per Pallet
*R595	31 × 24 × 19	5	135
*TW595	31 × 24 × 19	5	135
TW650	$31\frac{3}{8} \times 21\frac{3}{8} \times 12\frac{5}{8}$	10	130
R1034	$31\frac{3}{8} \times 21\frac{5}{8} \times 12\frac{5}{8}$	10	130
R248	32 × 6 × 6	25	500
TW248	32 × 6 × 6	25	500
*TW842	32 × 6 × 42 **(HD FOL)** (Large Art)	5	125
R652	32 × 8 × 8	20	360
TW652	32 × 8 × 8	20	360
R821	32 × 10 × 6	25	375
R568	32 × 12 × 9	20	240
R596	32 × 13 × 6	15	270
TW596	32 × 13 × 6	15	270
R97	32 × 14 × 5	15	270
R653	$32 \times 15\frac{5}{8} \times 12\frac{5}{8}$	10	130
TW653	$32 \times 15\frac{5}{8} \times 12\frac{5}{8}$	10	130
*R822	$32 \times 15\frac{5}{8} \times 24\frac{3}{4}$	10	130
*R823	$32 \times 15\frac{5}{8} \times 30\frac{5}{8}$	10	130
R281	32 × 17 × 16	10	130
TW281	32 × 17 × 16	10	130
TW655	32 × 24 × 4	10	130
R683	$32\frac{3}{4} \times 18\frac{1}{4} \times 12\frac{1}{2}$ **(Heavy Duty)**	10	120
R250	33 × 14 × 14	15	270
TW250	33 × 14 × 14	15	270
TW267	33 × 18 × 5	10	260
R216	33 × 18 × 10	10	260
TW216	33 × 18 × 10	10	260
R656	$33 \times 19 \times 4\frac{1}{2}$	10	260
†*TW845	$33\frac{1}{2} \times 23\frac{1}{2} \times 23\frac{1}{2}$ **(HD)** (Appliance)	5	125
†*TW843	$35\frac{3}{4} \times 5\frac{1}{2} \times 45\frac{1}{4}$ **(HD FOL)** (X-Lrg Art)	5	125
R657	36 × 6 × 6	20	480
TW657	36 × 6 × 6	20	480
R177	36 × 8 × 8	20	360
TW177	36 × 8 × 8	20	360
R824	36 × 10 × 6	25	375
R1050	$36 \times 11\frac{1}{2} \times 11\frac{1}{2}$	20	240
R658	36 × 12 × 4	15	405
TW658	36 × 12 × 4	15	405
R251	36 × 12 × 10	15	270
TW251	36 × 12 × 10	15	270
R289	36 × 12 × 16	10	260
TW289	36 × 12 × 16	10	260
R669	36 × 16 × 5	10	260
TW669	36 × 16 × 5	10	260
R659	36 × 16 × 7	10	260
TW659	36 × 16 × 7	10	260
R825	36 × 20 × 7	10	130
TW825	36 × 20 × 7	10	130
R660	36 × 20 × 9	10	130
TW660	36 × 20 × 9	10	130
*R661	36 × 20 × 15	10	130
*TW661	36 × 20 × 15	10	130
R662	36 × 21 × 12	10	130
TW662	36 × 21 × 12	10	130
*R283	36 × 21 × 20	5	135
*TW283	36 × 21 × 20	5	135
*R826	36 × 21 × 20 **(Heavy Duty)**	5	135
†*R827	36 × 24 × 24	5	135
*TW847	36 × 30 × 12 (x-score at 8")	5	135
†*R906	36 × 36 × 36 **(Doublewall)**	1	80
†*R1051	36 × 36 × 42	1	130
* R828	$36\frac{3}{8} \times 21\frac{7}{8} \times 19\frac{7}{8}$ **(Heavy Duty)**	5	135
TW663	37 × 9 × 9	20	240
*R830	37 × 14 × 21	10	130
†*R664	39 × 20 × 36	5	135
†*TW664	39 × 20 × 36	5	135
†*R831	39 × 20 × 36 **(Doublewall)**	5	80
R597	$39\frac{1}{2} \times 15\frac{1}{2} \times 17\frac{1}{4}$	10	130
R622	$39\frac{1}{2} \times 20 \times 10$	10	130
R255	40 × 8 × 8	20	360
TW255	40 × 8 × 8	20	360
R665	42 × 11 × 6	15	270
TW665	42 × 11 × 6	15	270
R666	42 × 11 × 10	10	260
TW666	42 × 11 × 10	10	260
R667	44 × 12 × 12	10	260
TW667	44 × 12 × 12	10	260
*R668	46 × 20 × 12 (x-score at 9")	10	130
*TW668	46 × 20 × 12 (x-score at 9")	10	130
†*TW844	$54 \times 8\frac{1}{2} \times 28\frac{1}{2}$ **(HD FOL)** (Bicycle)	5	125

*Exceeds U.S. Postal Service 108" max. †Exceeds U.P.S. 130" max.

CORRUGATED MAILERS (DIE-CUT)

32 ECT #3 WHITE OUTSIDE

Furnished flat — Rigid self-locking design sets up in seconds — Perfect for shipping and mailing, shelf display or storage — All dimensions are inside dimensions.

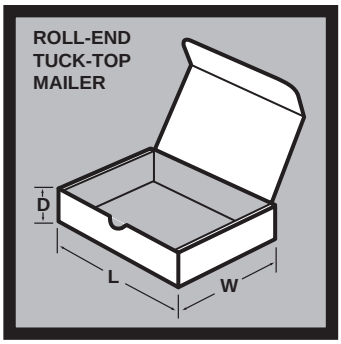

RETT

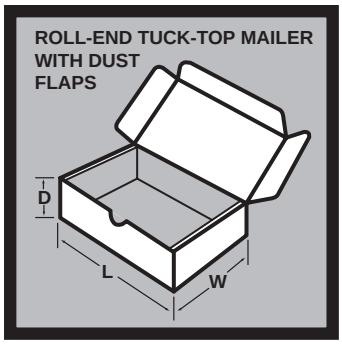

RETT/DF

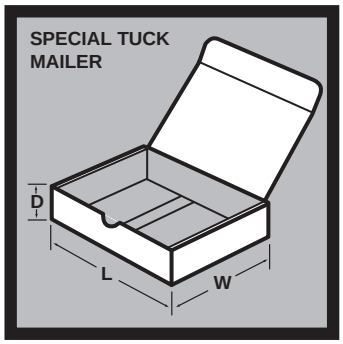

ST

ECCO/DF

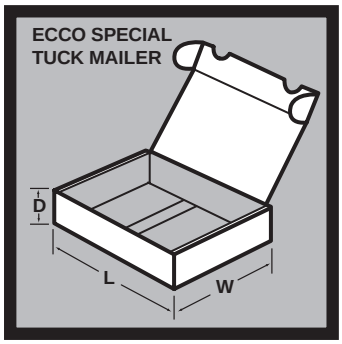

ECCO/ST

Stock No.	Inside Dimensions L × W × D	Style	No. Per Bundle	No. Per Pallet
M424	3 × 2 × 1	RETT	50	5250
M444	3 × 2 × 2	RETT	50	8750
M412	3 × 3 × 2	RETT	50	4200
M431	3 × 3 × 3	ST	50	3150
M488	$3\frac{1}{4} \times 3\frac{1}{4} \times 1\frac{1}{2}$	ECCO/DF	50	7000
M445	$3\frac{5}{8} \times 2\frac{11}{16} \times 2\frac{1}{16}$ (250 Cards)	RETT	50	5600
M436	$3\frac{3}{4} \times 3\frac{1}{2} \times 2\frac{5}{8}$ (200 Cards)	ECCO/ST	50	4200
M446	4 × 2 × 2	RETT	50	7000
M489	$4 \times 3 \times 1\frac{1}{2}$	ECCO/DF	50	7000
M438	4 × 3 × 2	RETT/DF	50	4200
M484	4 × 3 × 3	ST	50	3150
M413	4 × 4 × 2	RETT	50	4200
M414	4 × 4 × 3	RETT	50	4200
M490	$4\frac{1}{2} \times 3\frac{3}{8} \times 1\frac{1}{16}$	RETT	50	7000
M447	5 × 2 × 2	RETT	50	7000
M440	5 × 3 × 2	RETT	50	4200
M448	5 × 3 × 3	RETT	50	3150
M437	5 × 4 × 2	RETT	50	3150
M449	5 × 4 × 3	RETT	50	3150
M428	5 × 5 × 3	RETT	50	3150
M425	$5\frac{5}{16} \times 3\frac{5}{8} \times 2\frac{1}{16}$ (500 Cards)	RETT	50	4200
M491	$5\frac{1}{2} \times 3 \times 2\frac{1}{2}$	ST	50	3150
M442	$5\frac{1}{2} \times 4 \times 2$	RETT	50	3150
M426	6 × 2 × 2	RETT	50	5250
M451	6 × 3 × 2	RETT	50	4200
M433	6 × 3 × 3	ST	50	4200
M477	6 × 4 × 2	ECCO/DF	50	3150
M415	6 × 4 × 3	RETT	50	2100
M441	$6 \times 4\frac{1}{2} \times 2\frac{1}{4}$	RETT	50	2100
M452	6 × 6 × 1	RETT	50	4200
M417	6 × 6 × 3	RETT	50	1400
M432	$6\frac{1}{4} \times 4\frac{1}{4} \times 1\frac{1}{2}$	RETT/DF	50	3150
M439	$6\frac{1}{2} \times 3\frac{3}{4} \times 1\frac{1}{2}$	RETT	50	4200
M418	$6\frac{1}{2} \times 4\frac{1}{2} \times 2$	RETT	50	2100
M492	$6\frac{1}{2} \times 4\frac{1}{2} \times 4$	ST	50	2100
M443	$6\frac{5}{8} \times 4\frac{1}{8} \times 3\frac{5}{8}$	RETT/DF	50	1400
M455	7 × 3 × 2	RETT	50	4200
M485	7 × 3 × 3	ST	50	3150
M456	7 × 4 × 2	RETT	50	3150

Stock No.	Inside Dimensions L × W × D	Style	No. Per Bundle	No. Per Pallet
M420	7 × 4 × 3	RETT	50	2100
M427	7 × 4 × 4	RETT	50	1750
M457	$7 \times 6\frac{1}{2} \times 1\frac{7}{8}$	RETT	50	2100
M406	$7\frac{1}{2} \times 3\frac{1}{4} \times 2\frac{1}{4}$	ST	50	3150
M407	$7\frac{1}{2} \times 3\frac{3}{4} \times 3\frac{1}{4}$	ST	50	3150
M461	$7\frac{1}{2} \times 4\frac{1}{4} \times 1\frac{1}{16}$ (Video Cassette)	ECCO/DF	50	4200
M411	$7\frac{1}{2} \times 5\frac{1}{2} \times 3$	RETT	50	2100
M493	$7\frac{1}{2} \times 7\frac{1}{2} \times 2$	ECCO/DF	50	2100
M408	$7\frac{1}{2} \times 7\frac{1}{2} \times 3\frac{1}{4}$	RETT	50	1400
M458	8 × 3 × 2	RETT	50	2800
M459	8 × 4 × 2	RETT	50	2800
M460	8 × 4 × 3	RETT	50	2100
M421	8 × 4 × 4	RETT	50	1400
M487	$8 \times 5 \times 1\frac{1}{4}$ (Video Cassette)	ECCO/DF	50	3150
M409	8 × 5 × 3	ST	50	2100
M478	$8 \times 6 \times 1\frac{1}{2}$	ECCO/DF	50	2100
M464	$8\frac{1}{8} \times 4\frac{3}{4} \times 1\frac{3}{16}$ (Video Cassette)	ECCO/DF	50	3150
M467	$8\frac{1}{4} \times 8\frac{1}{4} \times 1\frac{3}{4}$	RETT	50	2100
M462	9 × 2 × 2	RETT	50	3500
M463	9 × 3 × 3	RETT	50	2100
M416	9 × 4 × 4	RETT/DF	50	1400
M473	$9 \times 5\frac{1}{2} \times 1\frac{1}{4}$ (Video Cassette)	ECCO/DF	50	3150
M401	9 × 6 × 1	RETT/DF	50	3150
M511	$9 \times 6 \times 3\frac{1}{2}$	ECCO/ST	50	1400
M486	$9 \times 6 \times 3\frac{1}{2}$ (Spec. Sty. Security Mailer)		50	700
M429	$9\frac{3}{8} \times 5\frac{1}{4} \times 2\frac{1}{2}$	RETT	50	2100
M430	$9\frac{3}{8} \times 7\frac{1}{4} \times 2\frac{1}{2}$	RETT	50	1400
M410	$9\frac{1}{2} \times 8 \times 2\frac{1}{4}$	RETT	50	1400
M465	10 × 2 × 2	RETT	50	2800
M466	10 × 3 × 2	RETT	50	2800
M510	10 × 3 × 3	ST	50	2100
M468	10 × 4 × 2	RETT	50	2100
M469	10 × 4 × 3	RETT	50	2100
M422	10 × 4 × 4	RETT	50	1400
M496	10 × 10 × 2	RETT	50	1400
M470	$10\frac{1}{8} \times 4\frac{1}{8} \times 3\frac{1}{2}$	RETT/DF	50	1400
M471	$10\frac{5}{8} \times 3\frac{5}{8} \times 2\frac{1}{16}$	RETT	50	2100
M497	$11 \times 6\frac{1}{2} \times 2\frac{3}{4}$	RETT	50	1400
M472	$11\frac{1}{8} \times 4\frac{1}{2} \times 2\frac{5}{8}$	RETT/DF	50	1400